Jeffco 8300 Shampoo Bowl Installation

Install the Wall Bracket so that the top edge is 31-$^1/_4$" from the finished floor. (This backet height is suggested to obtain the most suitable neckrest height. However, the bracket height may be varied to suit personal preference.) Be sure that the Bracket is securely fastened to a structural member in the wall. Also, be sure the Bracket is level. Install the Leveling Bolt into the Wall Bracket.

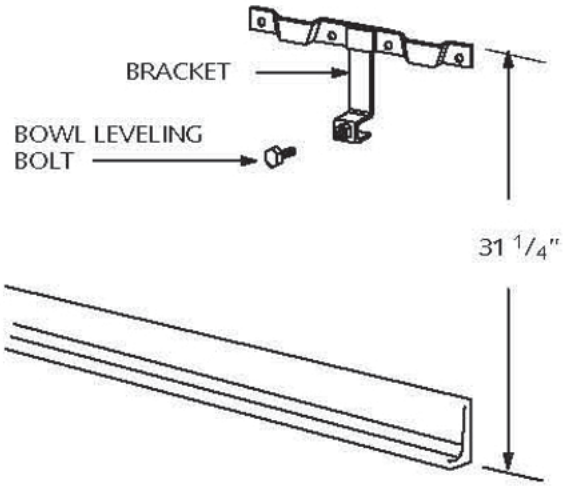

Mount the Bowl onto the Wall Bracket by lowering the Lugs on the back of the Bowl into the Wall Bracket.

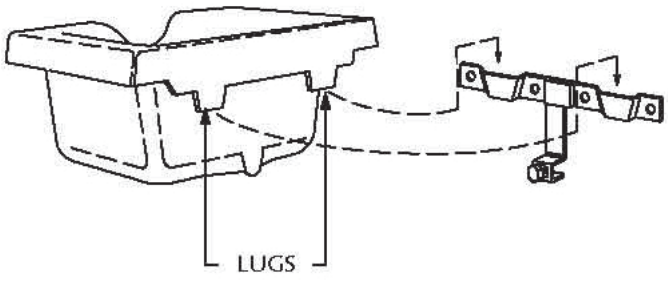

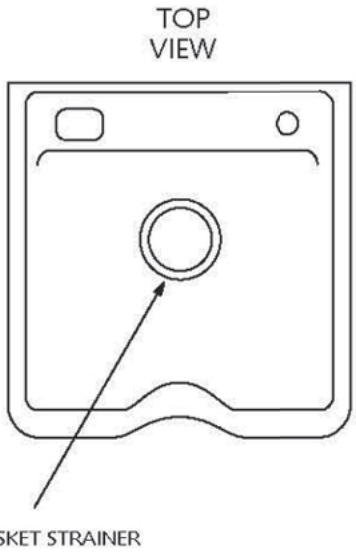

Check to be sure the Bowl is level side-to-side and front-to-back. Connect the Fixture to the hot and cold supply lines. Install the trap and connect the drain. Apply a bead of silicone to the back edge of the Bowl to seal it to the wall.

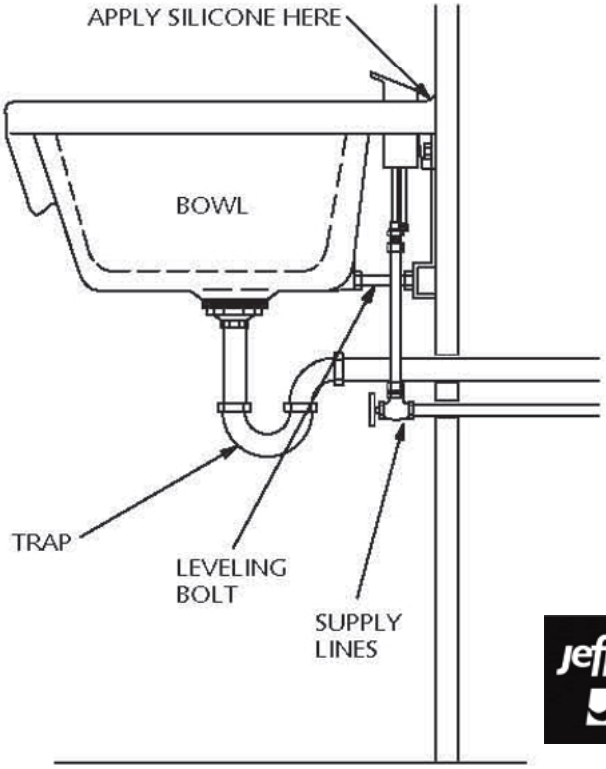

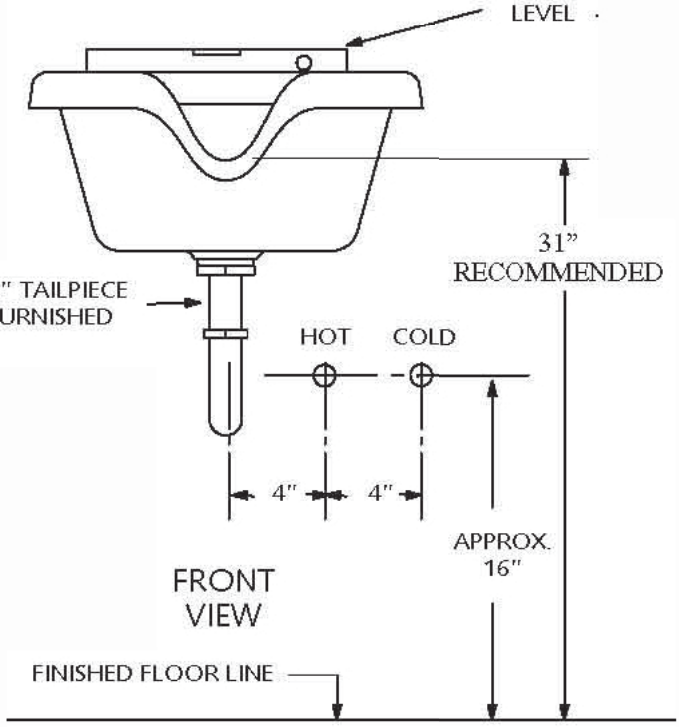

HOSE CONNECTIONS

If your Bowl *is* equipped with a Vacuum Beaker, connect one end of the Fixture Hose to the inlet side of the Vacuum Breaker. Connect the other end to the Fixture Tailpiece. Attach the Spray Hose connector to the Vacuum Breaker outlet.

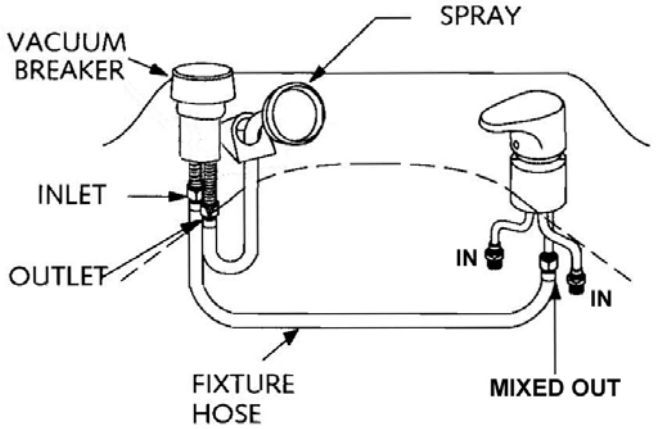

If your Bowl *is not* equipped with a Vacuum Breaker attach the Spray Hose connector to the fixture tailpiece.

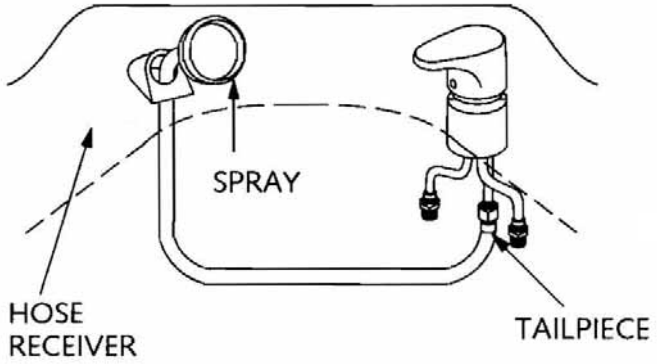

IMPORTANT!
DO NOT OVERTIGHTEN DRAIN ASSEMBLY!

INSTALL THE DRAIN ASSEMBLY

Apply a liberal amount of plumber's putty around the top of the drain opening.

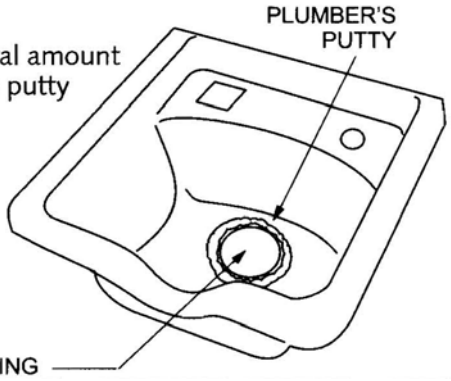

Place the Strainer Body in the opening, and press it into the plumber's putty.

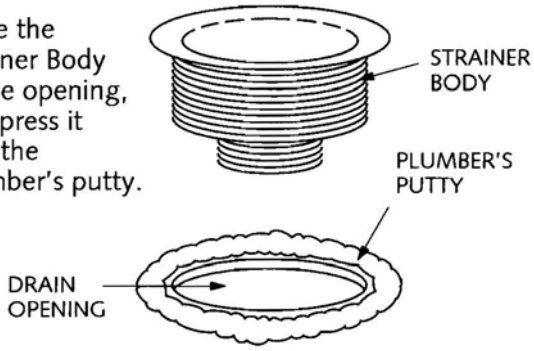

From the underside of the Bowl, place the Fiber and Rubber Washers over the Strainer Body. Secure the Strainer Body with the Nut. DO NOT OVER-TIGHTEN. When the Strainer Body is tightened securely to the Bowl, clean off any excess plumber's putty.

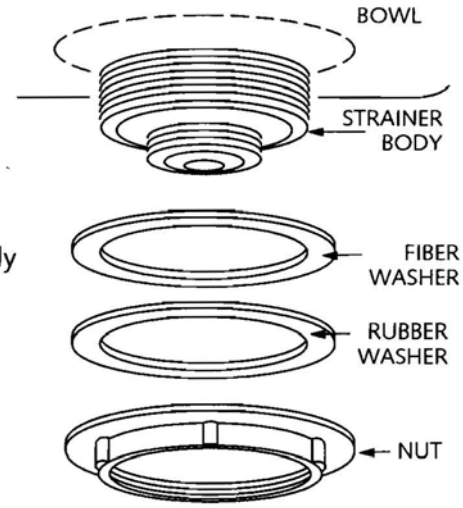

Attach the Gasket and Tailpiece to the Strainer Body. DO NOT OVERTIGHTEN.

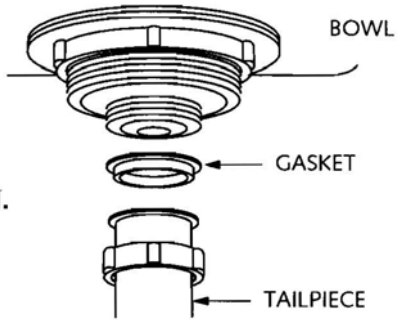

INSTALLATION INSTRUCTIONS

MODEL NUMBER : 570

CHROME LEVER-HANDLE FAUCET

INSTALLATION GUIDELINES

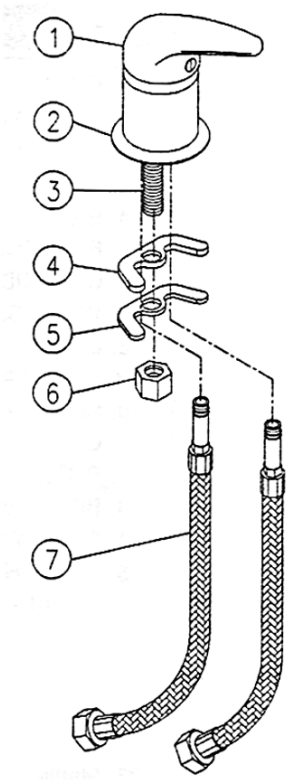

ENGLISH

1. Unscrew the fixed parts (such as (#6) fix nut, (#5) brass washer, (#4) rubber washer) from the faucet.
2. Have the two (#7) flexible hoses screwed to the hot/cold water outlet accordingly.
3. Put the (#1) Main body and (#2) Base of the main body from the top to line up with the reserved hole on basin.
4. From the bottom, secure the (#4) rubber washer, (#5) brass washer in the order by screwing the (#6) fix nut to the (#3) retaining mounting tube.

ESPANOL

1. Desatornille las partes que contengan roscas (como por ejemplo #6, atornillador de cobre #5 y atornillador de plastico #4) de la llave.
2. Conecte las dos mangueras (parte #7) a la conexion de el agua caliente/fria como sea necesario.
3. Ponga la llave principal (parte #1) y la base (parte #2) en el hoyo de arriba designado especificamente para este uso.
4. De la parte de abajo del lavado, apriete en orden el atornillador de plastico (parte #4) luego el atornillador de cobre (parte #5) reforzandolos con la rosca #6 en el tubo de montaje (parte #3).

FRANCAIS

1. Dévissez les pièces fixes (telles que l'écrou de difficulté #6, la rondelle #5 en laiton, et la rondelle #4 en caoutchouc) du robinet
2. Ayez les deux tuyaux #7 flexibles vissés à la sortie eau chaude/froide en conséquence.
3. Mettez le corps #1 principal et la base #2 du corps principal à partir du dessus pour aligner avec le trou réservé en bassin.
4. Du fond, fixez la rondelle #4 en caoutchouc et la rondelle #5 en laiton dans l'ordre en vissant l'écrou de la difficulté #6 au #3 maintenant le tube de support.

CORRECT HOSE CONNECTIONS FOR VACUUM BREAKER

ESPANOL: CONEXIONES CORRECTAS de la MANGUERA para el TRITURADOR del VACÍO

FRANCAIS: RACCORDEMENTS CORRECTS de TUYAU pour le BRISEUR de VIDE

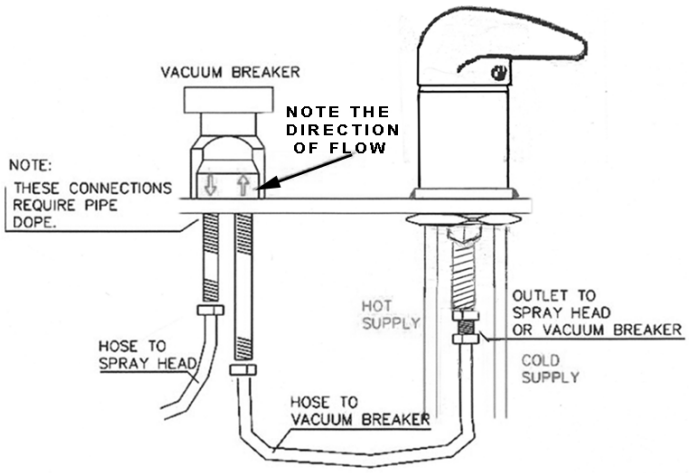

ENGLISH: Arrows on the vacuum breaker indicate directional flow of water. Device will leak and not work properly if installed with water flow reversed.

ESPANOL: Las flechas en el triturador del vacío indican el flujo direccional de agua. El dispositivo se escapará y no funcionará correctamente si está instalado con la corriente invertida.

FRANCAIS: Les flèches sur le briseur de vide indiquent l'écoulement directionnel de l'eau. Le dispositif coulera et ne fonctionnera pas correctement s'installé avec l'écoulement d'eau a renversé.

VACUUM BREAKER WILL LEAK IF WATER FLOW IS REVERSED

Jeffco Salon Equipment, LLC
2000 Bowser Road
Cookeville, TN 38506
www.jeffcosalonequipment.com

INSTALLATION INSTRUCTIONS

MODEL NUMBER : 570

CHROME LEVER-HANDLE FAUCET

ILLUSTRATED PARTS LIST

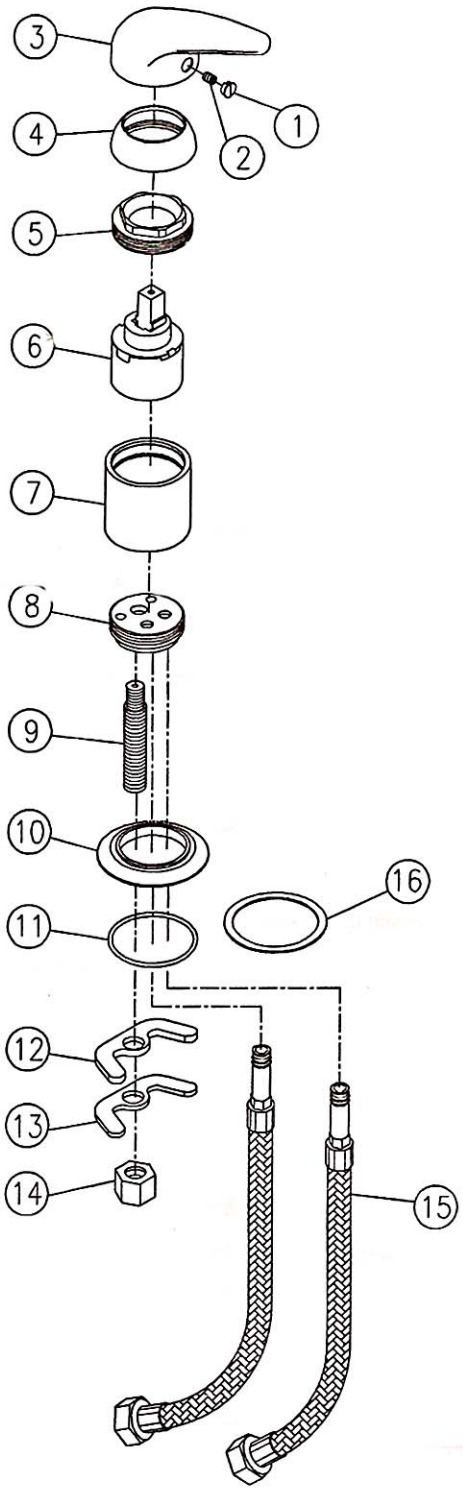

ENGLISH:

01. INDEX BUTTON
02. HANDLE SCREW
03. HANDLE
04. ESCUTCHEON
05. ESCUTCHEON NUT
06. CARTRIDGE: VALVE
07. VALVE SLEEVE
08. DRAIN
09. SPOUT ADAPTER
10. SPOUT BASE
11. O-RING
12. RUBBER WASHER
13. BRASS WASHER
14. SUPPLY NUT
15. STEEL HOSE
16. RUBBER WASHER

ESPANOL:

01. Tornillo de Seguridad
02. Tornillo de Ajuste
03. Manija
04. Abrazadera
05. Abrazadera con Ajuste
06. Valvula de Soporte
07. Valvula Cobertora
08. Destape
09. Adaptador de Destape
10. Base de Destape
11. Anillo "O"
12. Abrazadera de Plastico
13. Abrazadera de Cobre
14. Tuerca
15. Manguera de Acero
16. Arandela de gome

FRANCAIS:

01. BOUTON D'INDEX
02. VIS DE POIGNÉE
03. POIGNÉE
04. CACHE
05. ÉCROU DE CACHE
06. CARTOUCHE - VALVE
07. DOUILLE DE VALVE
08. DRAIN
09. ADAPTEUR DE BEC
10. BASE DE BEC
11. JOINT CIRCULAIRE
12. RONDELLE EN CAOUTCHOUC
13. RONDELLE EN LAITON
14. ÉCROU D'APPROVISIONNEMENT
15. TUYAU EN ACIER
16. RONDELLE EN CAOUTCHOUC

www.jeffcosalonequipment.com

Jeffco Salon Equipment, LLC
2000 Bowser Road
Cookeville, TN 38506

Jeffco 8300 Shampoo Bowls

CARE & MAINTENANCE

GENERAL CLEANING: Harsh chemicals and disinfectants may damage your new Jeffco ABS Shampoo Bowl. For the best results, use soap and water and/or non-abrasive cleaners. Review the instructions on the bottle before applying any cleaner to the surface. For best results, we recommend the following cleaners be used:

WINDEX, GLASS PLUS, FORMULA 409, MR. CLEAN, SPIC & SPAN, CLOROX

The following cleaners are not recommended for use and may even damage your shampoo bowl:

LYSOL DISINFECTANT SPRAY, LESTOIL, INESOL, WHITECAP, or
DOW DISINFECTANT BATHROOM CLEANER,

ABRASIONS & SCRATCHES: Light abrasions and scratches may be removed and the original gloss substantially restored by using the following materials:

NOVUS PLASTIC POLISH, PERMATEX PLASTIC CLEANER #430D, TURTLEWAX POLISHING COMPUND, J-WAX AUTOMOTIVE CLEANER/WAX.

FOR MORE STUBBORN STAINS: The following agents may be effective with more stubborn stains, but these agents must be removed quickly and the bowl then be thoroughly cleaned with soap & water to avoid permanent damage.

KEROSENE, RUBBING ALCOHOL mixed with 50% water, TRIALENE SOAP, GASOLINE.

WIPE OFF COLOR and CHEMICALS IMMEDIATELY! PROLONGED EXPOSURE TO THESE CHEMICALS CAN PERMANENTLY DISCOLOR OR DAMAGE THE BOWL'S FINISH. DO NOT PUT NAIL CARE PRODUCTS, ACETONES, KETONES, ESTERS, OR AROMATIC HYDROCARBONS IN THE SHAMPOO BOWL.

Failure to follow the above instructions, or use of cleaning products not listed above will void the factory warranty.